Section view T-T
Scale: 1:2

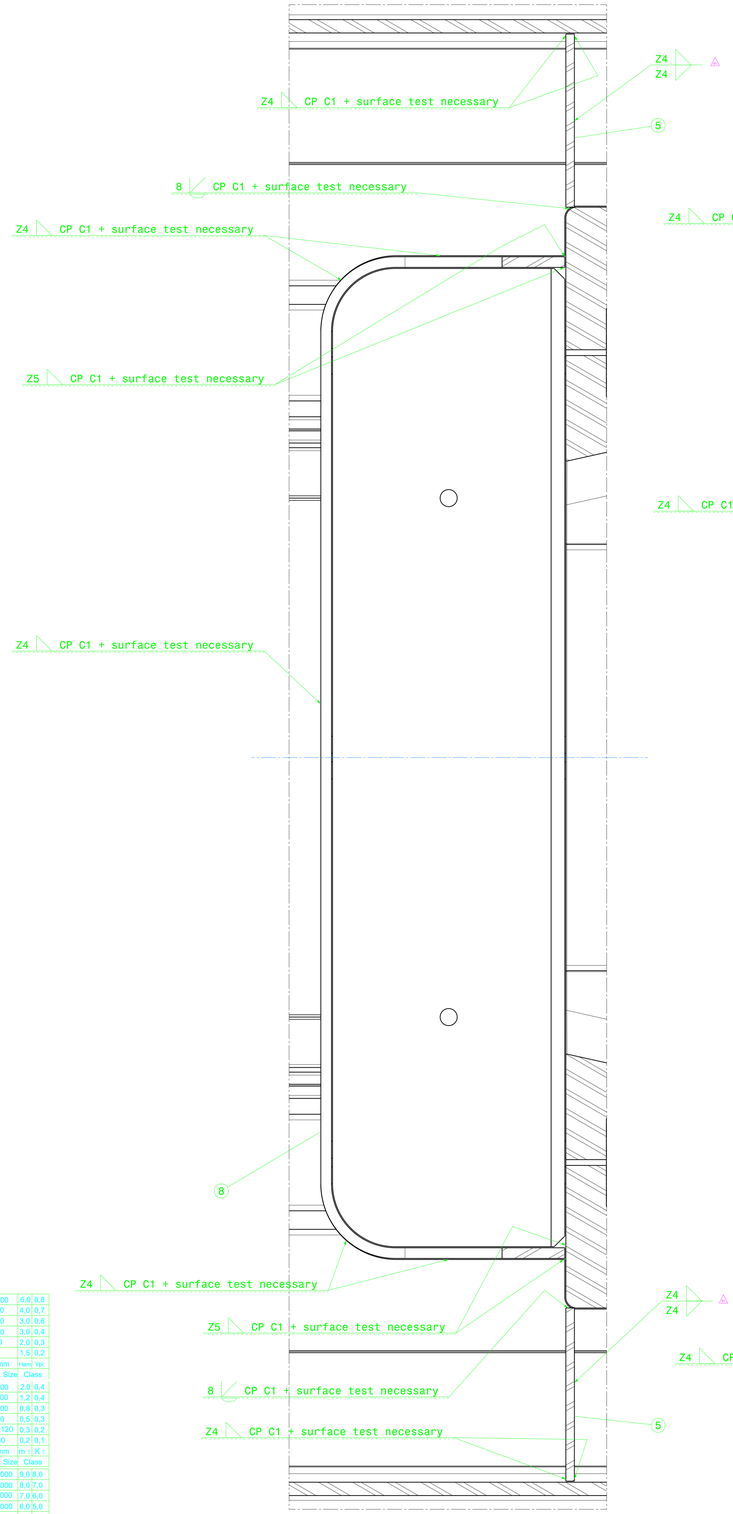

Section view S-S
Scale: 1:2

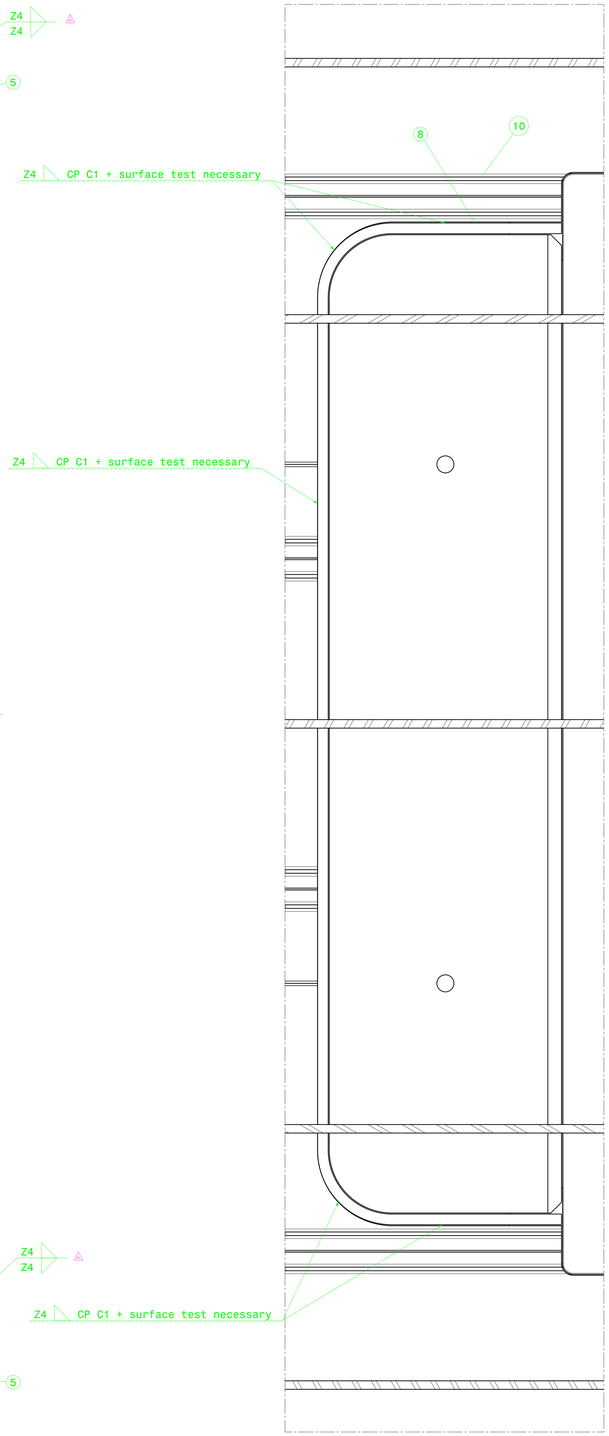

Section view Q-Q
Scale: 1:2

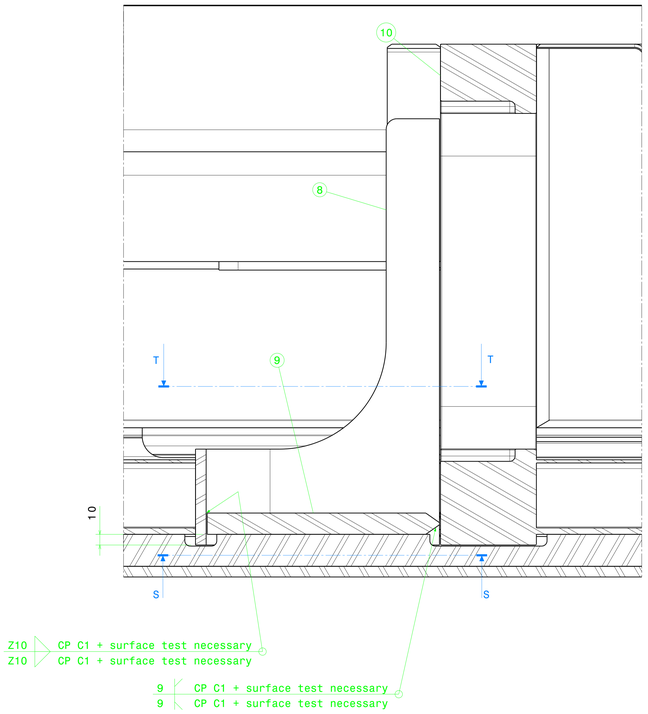

Detail A
Scale: 1:10

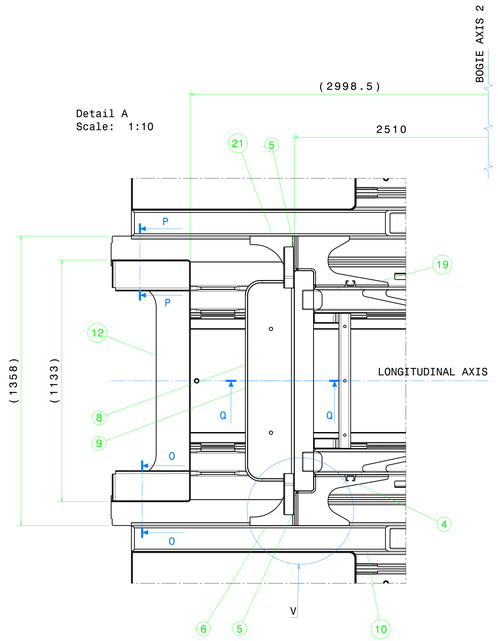

Section cut O-O
Scale: 1:2

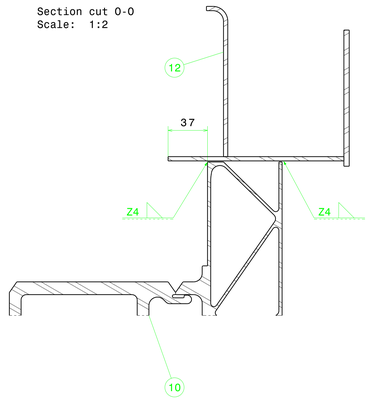

Section cut P-P
Scale: 1:2

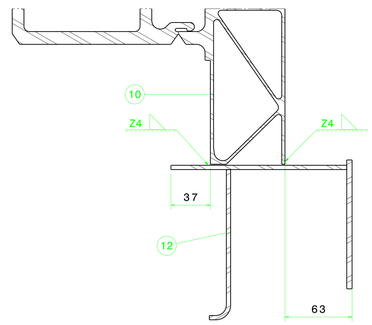

ISO 1302 Welded Construction - ISO 2768 General Tolerances - BS 17708 Steel Castings			
	<1000	6,0	0,8
	<630	4,0	0,7
	<400	3,0	0,6
	<250	3,0	0,4
	100	2,0	0,3
	40	1,5	0,2
	L mm	Hem	Yşl.
	Nom. Size	Class	
	<4000	2,0	0,4
	<2000	1,2	0,4
	<1000	0,8	0,3
	<400	0,5	0,3
	30-120	0,3	0,2
	2-30	0,2	0,1
	L mm	m ±	K ±
	Nom. Size	Class	
	>20000	9,0	8,0
	<20000	8,0	7,0
	<16000	7,0	6,0
	<12000	6,0	5,0
	<8000	5,0	4,0
	<4000	4,0	3,0
	<2000	3,0	2,0
	<1000	2,0	1,5
	<400	1,0	1,0
	30-120	1,0	0,5
	2-30	1,0	0,5
	L mm	A ±	E ±
	Nom. Size	Class	

Reproduction, dissemination or use of this document or its all or contents in any form without the prior written permission of TÜRASAŞ is prohibited. Offenders will be liable for the payment of damages. All rights reserved in the event of the grant of a patent, utility model or industrial design registration.

No	Parça Adı / Designation Name of Item	Adet / Qty.	Resim No / Norm / Drawing No / Norm	Malzeme / Material	Ölçü / Dimension	Ağırlık / Weight (Kg)
						4130,4

ISO 1302	ISO 8015	EN 22553	General Tol.
EN 15085-2 Certification Level		CL1☐ CL2☐ CL3☐ CL4☐	Weld Pro.
			Cast Steel
ISO 2768	f ☐	m☒	c☐	v☒
ISO 13920	A☒	B☐	E☒	F☐
ISO 12708	Lm2☐	Ln2☐	Sm2☐	Sn2☐

Approved	E.M. ERDOĞAN	Scale	1:25
Checked	Y. KARABEL		
Prepared	M.K. TAŞ		

TÜRASAŞ
Türkiye Rayli Sistem Araçları San. A.Ş.

Complete_Underframe
-

FT20.03.01.00000

Technical Specifications					
Technical Document					
Fixture/Mould Asset ID					
Coating/Heat Tre./Roughness		R01	Missing weld symbols and section views have been added.	27/01/2026	E.M.ERDOĞAN
Paint/Color	-	Modf. No	Modification Description	Date	Sign

TYP

Date:02.07.2024 | Sheet : 2/4 | Size:A0 | Rev: 01